REVISIONS				
ZONE	REV	DESCRIPTION	DATE	APPROVED
	A	1 & 2--WAS 1/4-20	09FEB95	
	B	LID THREAD REVISED	09FEB00	

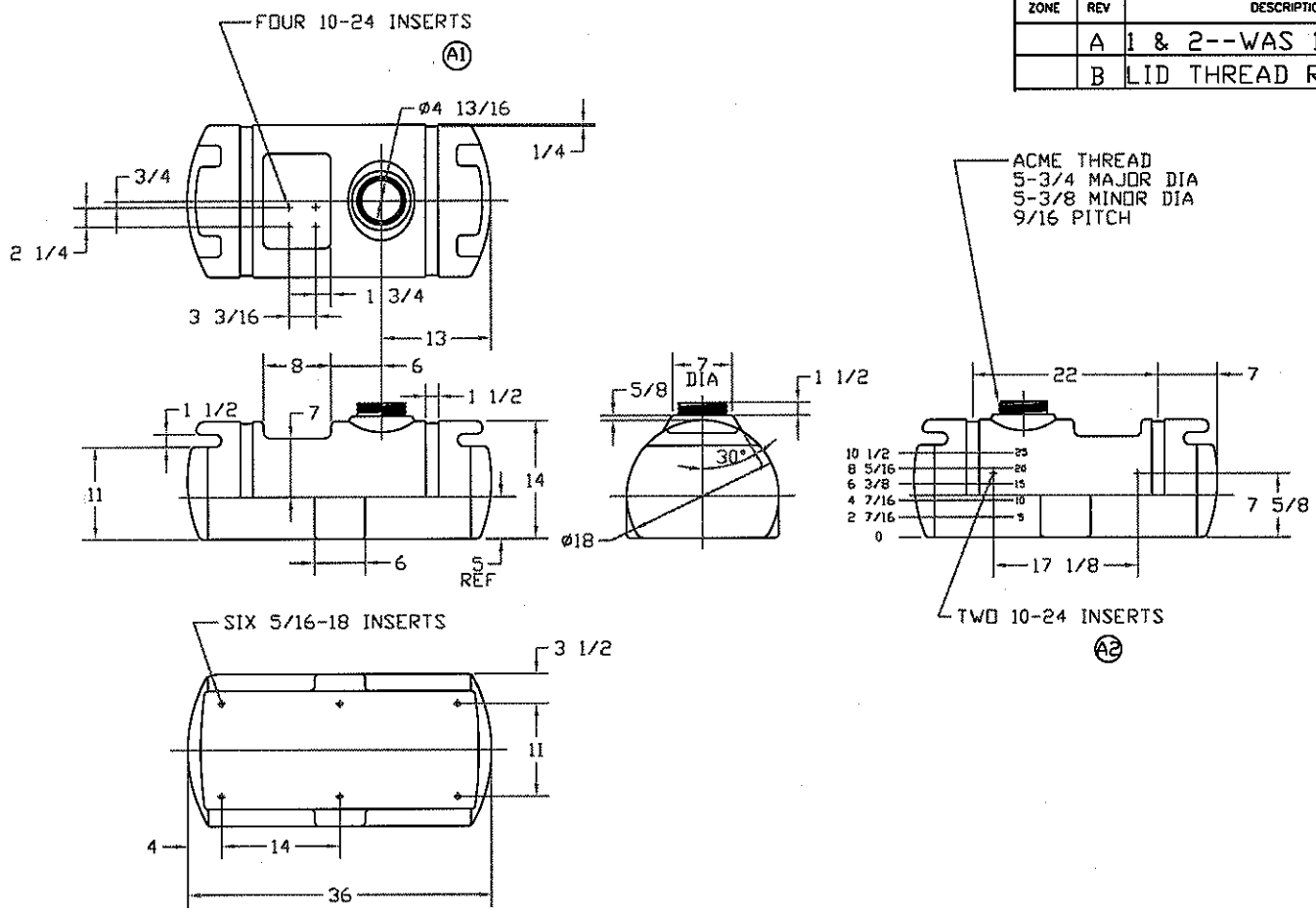

NORWESCO
ST. BONIFACIUS, MN

25 GALLON
SPOT SPRAYER TANK

JTP 04NOV94	SIZE B	FSCM NO.	DWG NO.	REV B
	SCALE 1/16		SHEET	